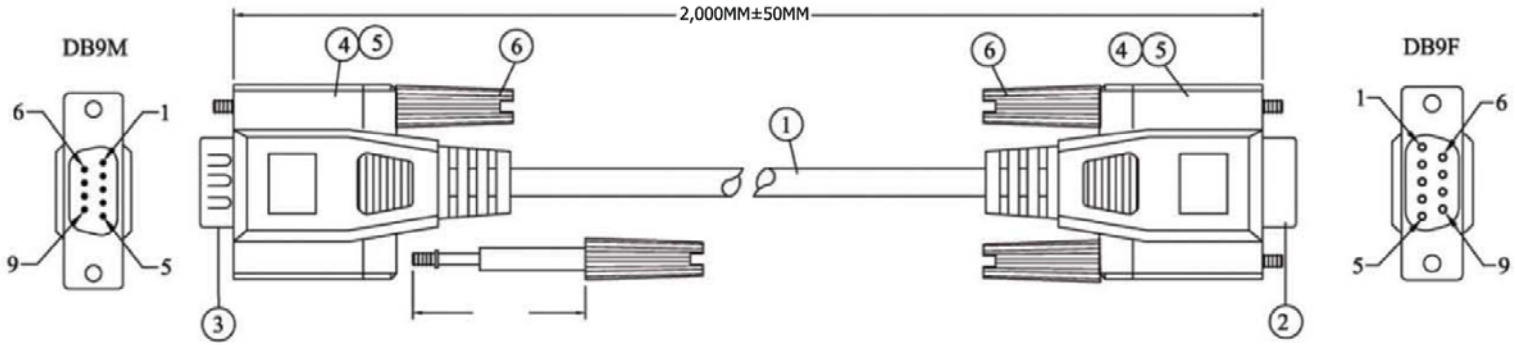

DB9M	DB9F
1	1
2	2
3	3
4	4
5	5
6	6
7	7
8	8
9	9
SHIELD	SHIELD

ELECTRICAL TEST:

1.100% SHORT,OPEN,MISWIRE TEST

2.CONTACTOR RESISTANCE: 2 Ohm (MAX.)

3.INSULATION RESISTANCE: 5M Ohm(MIN.)

NO.	DESCRIPTION
⑥	THUMB SCREW: #4-40UNC
⑤	OUTER MOLD: PVC 45P COLOR BEIGE
④	INNER MOLD: PVC 65P
③	CONNECTOR: DB9 MALE SOLDER TYPE INSULATION:BLUE
②	CONNECTOR: DB9 FEMALE SOLDER TYPE INSULATION:BLUE
①	CABLE: NOUL 28AWG*9C+AD O.D:5.0MM PVC JACKET COLOR BEIGE(CS-B02)

RoHS Complaint

Scale	1:1
TOLERANCE	
X.X	±0.40
X.XX	±0.25
X.XXX	±0.15
Angle	±3°

Modification	Date	Name

		Name
Drawn	11.15.11	Chappell
Approved		

ASSMANN WSW components

Item No. **AK131-2**

Title: Serial Extension Cable - 9 Pin, Male <=> Female Molded, 2 Meters

Drawing No.

rev00

Replace

Sheet